SR846C

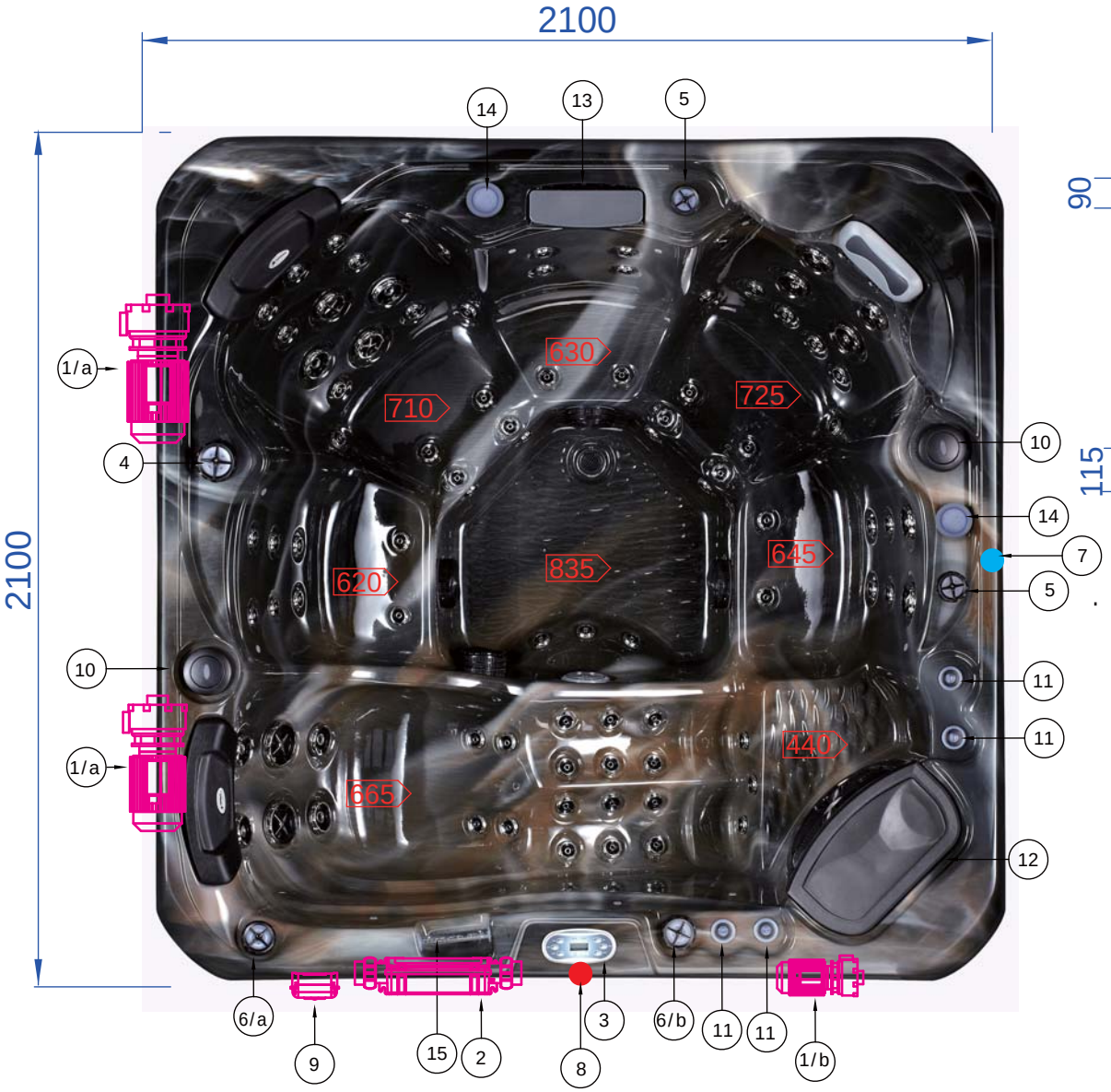

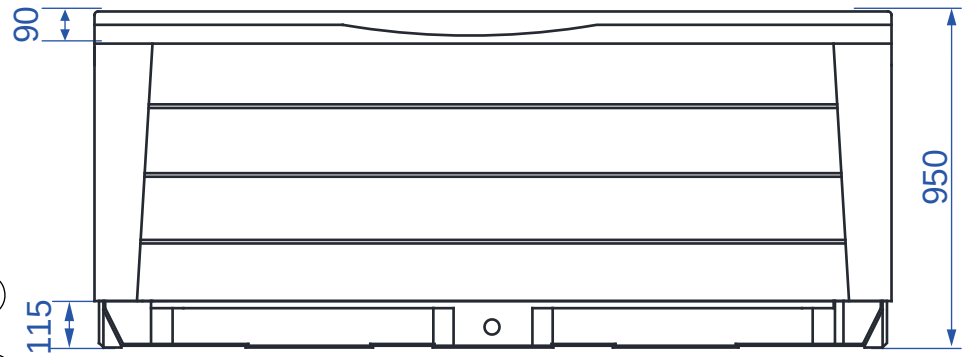

	Name	Pcs	Mark/Remark
1/a	Hydromassage pump	2	
1/b	Circulation pump	1	
2.	Control box	1	
3.	Control panel	1	
4.	Water diverter	1	
5.	Air regulator	4	
6/a.	Waterfall diverter	1	
6/b.	Fountain diverter	1	
7.	Drain connector	1	
8.	Electric connector	1	
9.	Ozonator	1	
10.	sound	2	
11.	fountain	4	
12.	filter	1	
13.	waterfall	1	
14.	light cup	2	
15.	glo-sticks	1	

690 Seat depth