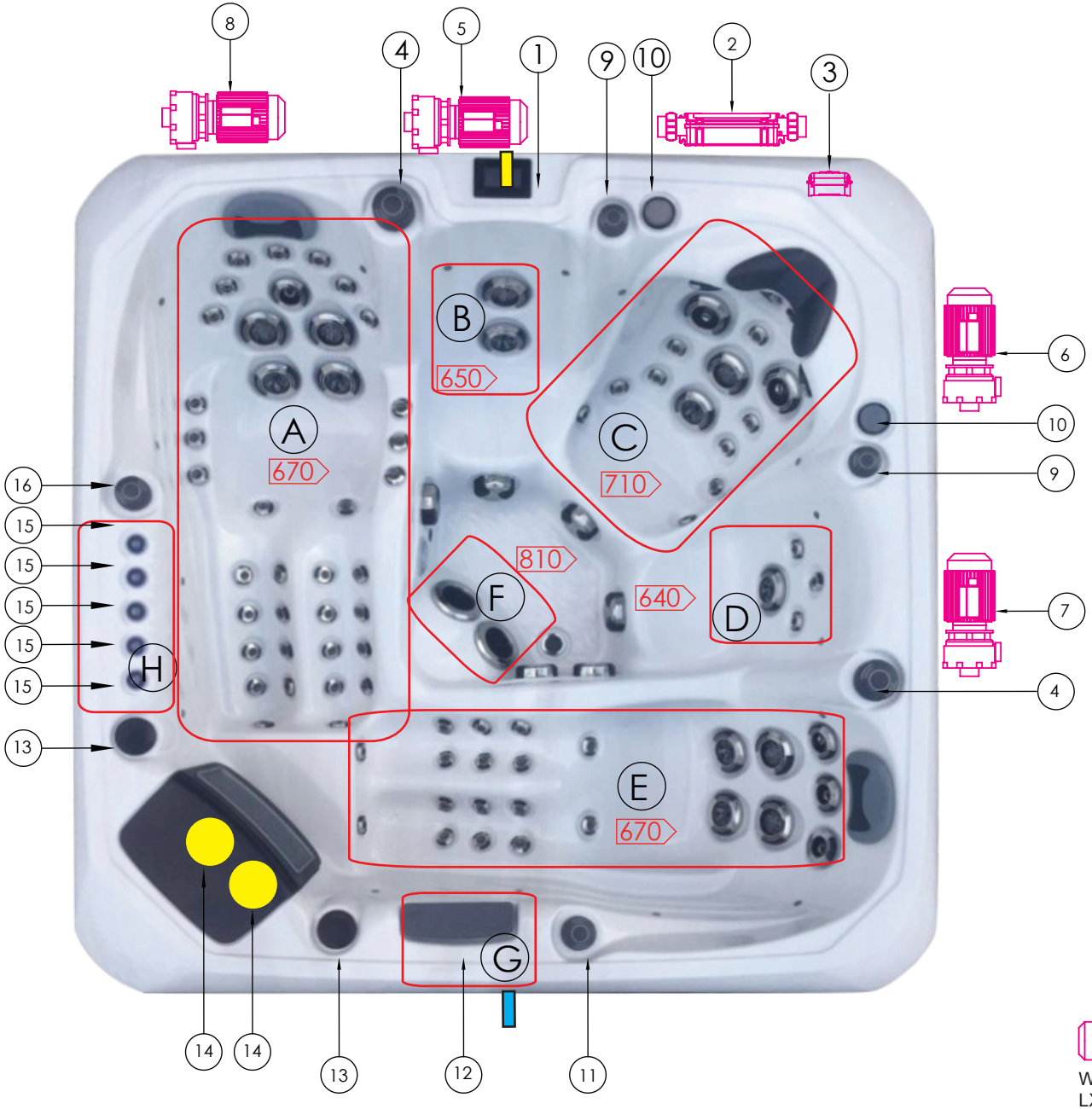

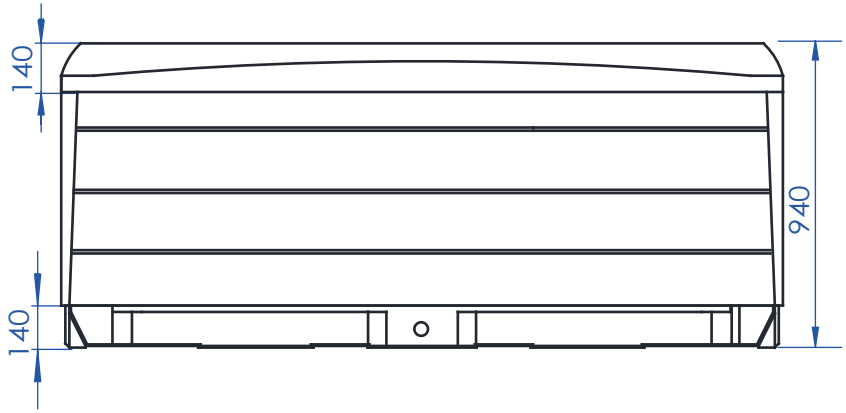
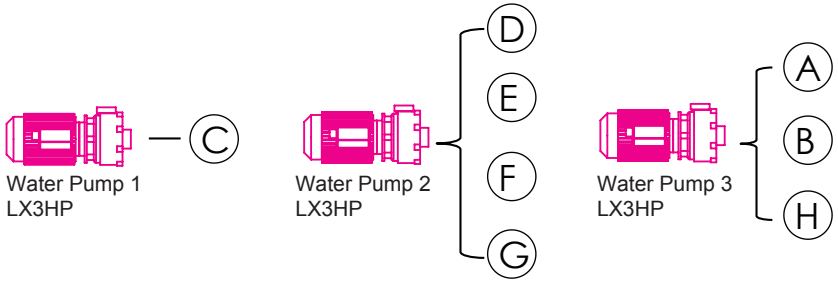
	Name	Pcs	Mark/Remark
1.	Control panel	1	
2.	Control box	1	
3.	Ozonator	1	
4.	Water diverter	2	
5.	Circulating pump	1	
6.	Water pump 1 LX3HP	1	
7.	Water pump 2 LX3HP	1	
8.	Water pump 3 LX3HP	1	
9.	Air regulator	2	
10.	Cup holder	2	
11.	Waterfall controller	1	
12.	waterfall	1	
13.	Speakers	2	
14.	filter	2	
15.	fountain	5	
16.	fountain regulator	1